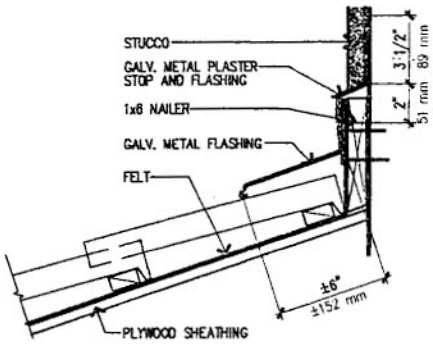
STUCCO
GALV. METAL PLASTER STOP AND FLASHING
1x6 NAILER
GALV. METAL FLASHING
FELT
PLYWOOD SHEATHING
3 1/2"
89 mm
2"
51 mm
±6"
±152 mm

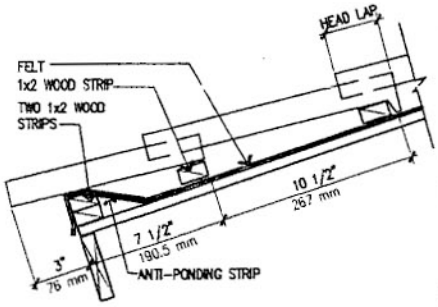
HEAD LAP
FELT
1x2 WOOD STRIP
TWO 1x2 WOOD STRIPS
10 1/2"
267 mm
7 1/2"
190.5 mm
3"
76 mm
ANTI-PONDING STRIP

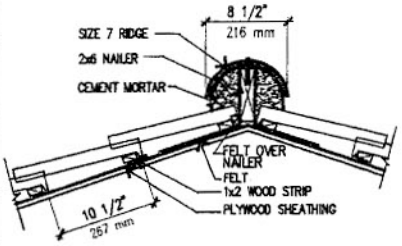
8 1/2"
216 mm
SIZE 7 RIDGE
2x6 NAILER
CEMENT MORTAR
FELT OVER NAILER
FELT
1x2 WOOD STRIP
PLYWOOD SHEATHING
10 1/2"
267 mm

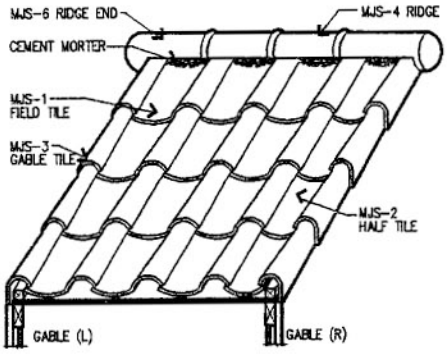
MJS-6 RIDGE END
MJS-4 RIDGE
CEMENT MORTER
MJS-1 FIELD TILE
MJS-3 GABLE TILE
MJS-2 HALF TILE
GABLE (L)
GABLE (R)

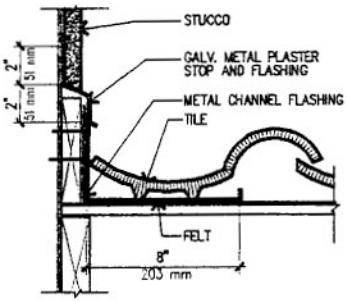
STUCCO
GALV. METAL PLASTER STOP AND FLASHING
METAL CHANNEL FLASHING
TILE
FELT
2"
51 mm
2"
51 mm
8"
203 mm

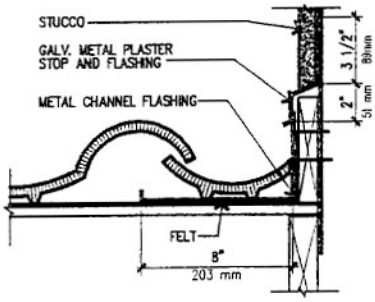
STUCCO
GALV. METAL PLASTER STOP AND FLASHING
METAL CHANNEL FLASHING
FELT
3 1/2"
89mm
2"
51 mm
8"
203 mm

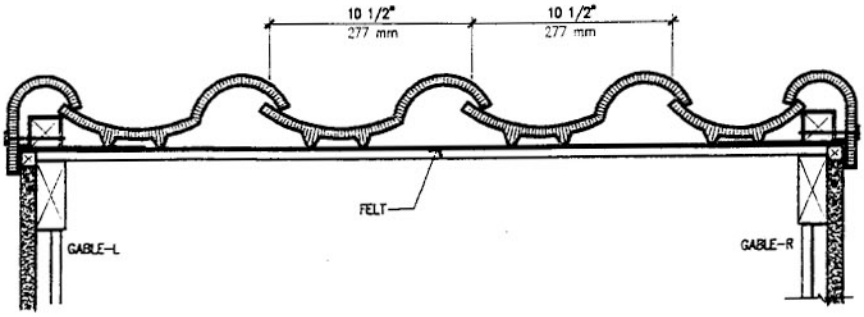
10 1/2"
277 mm
10 1/2"
277 mm
FELT
GABLE-L
GABLE-R

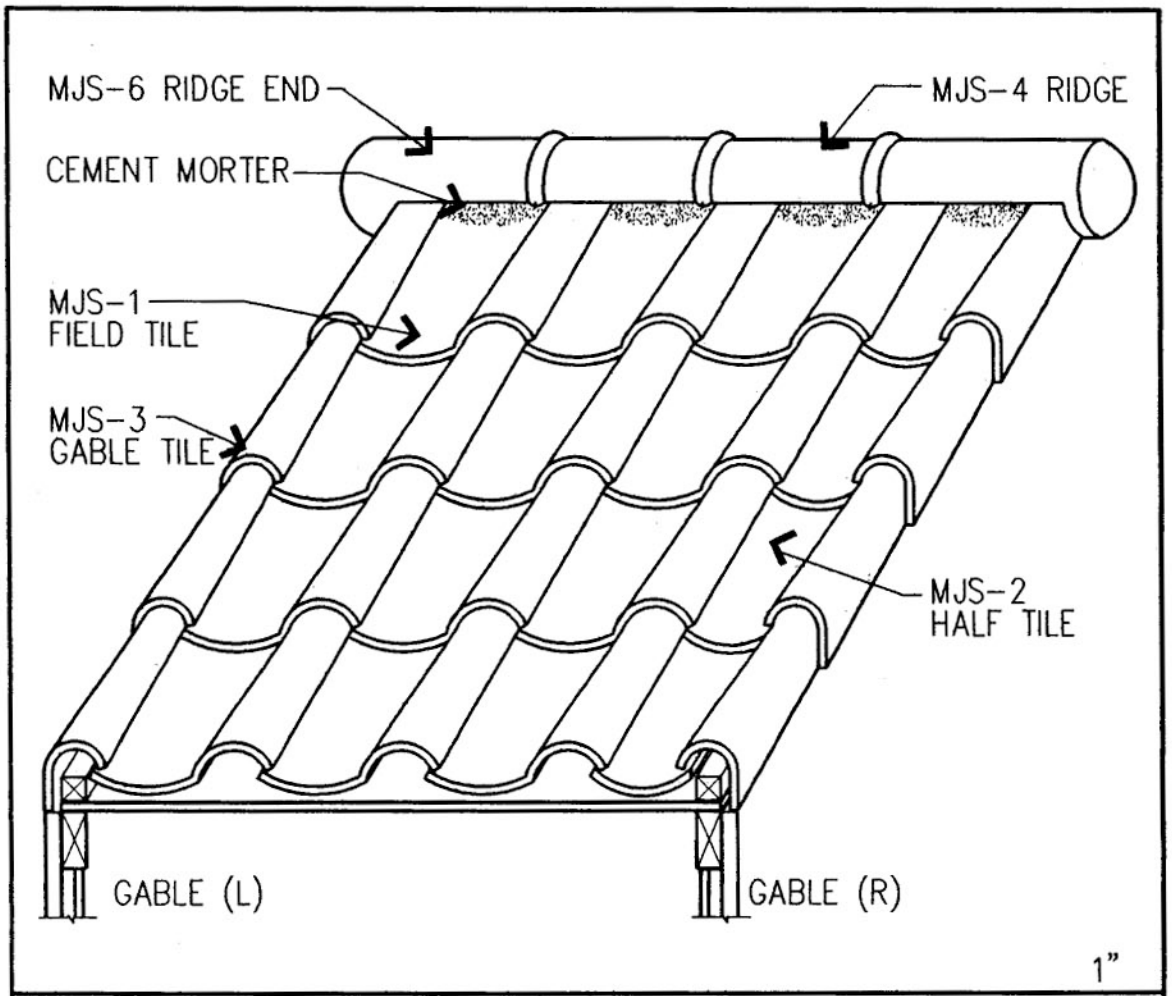

FIELD DETAIL

MCA-IS-3D

N.T.S.

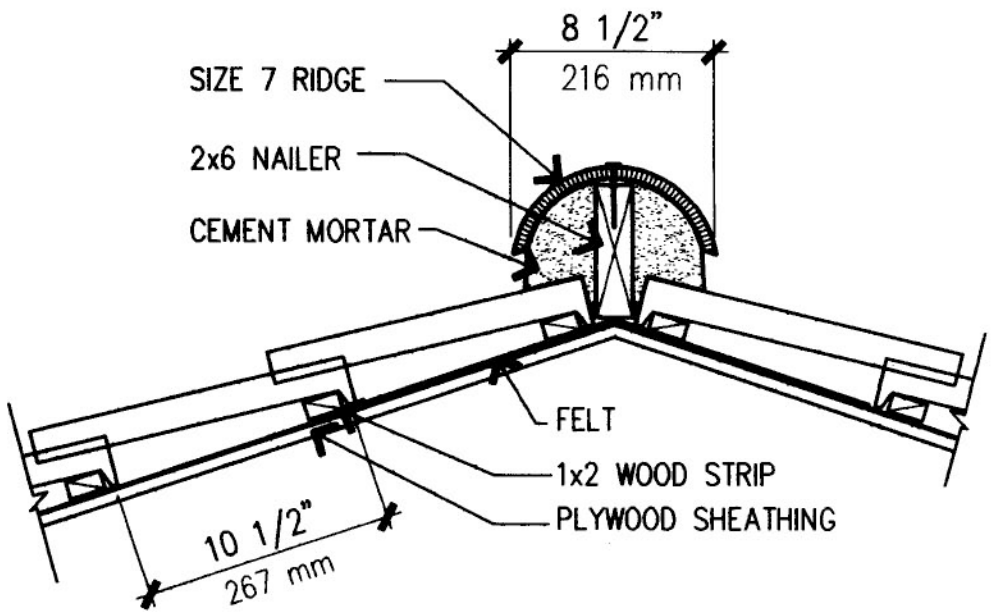

RIDGE DETAIL

RIDGE DETAIL

MCA-IS-RIDGE

1-1/2"=1'-0"

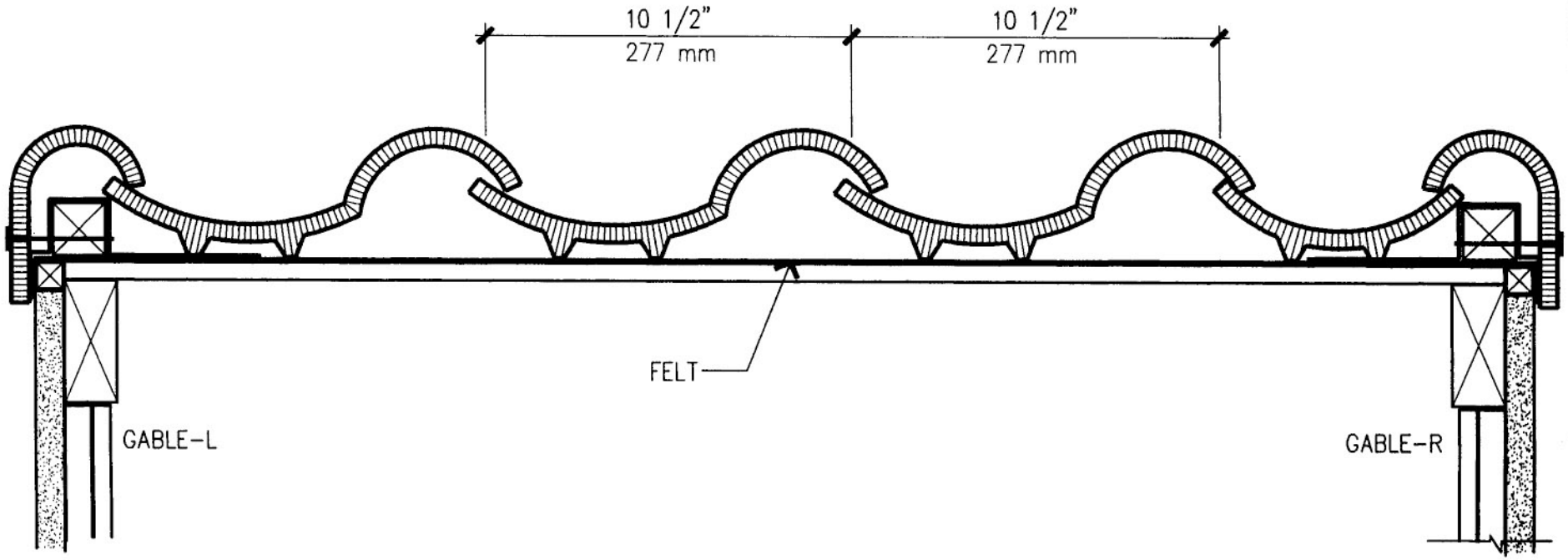

GABLE DETAIL

MCA-IS-GABLE

3"=1'-0"